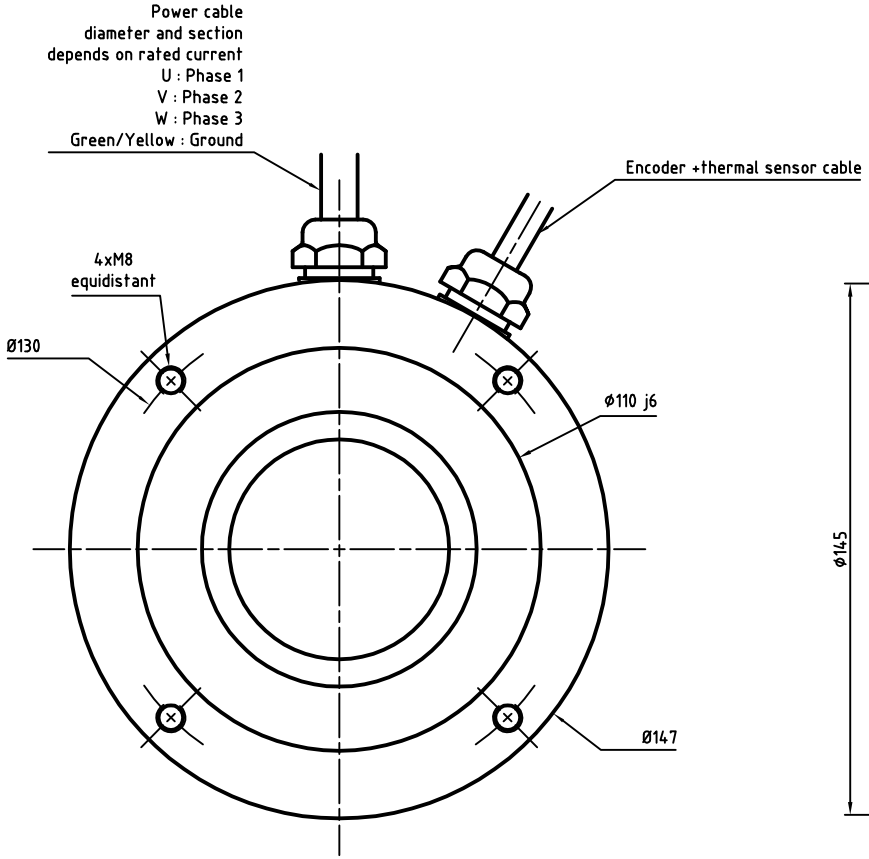

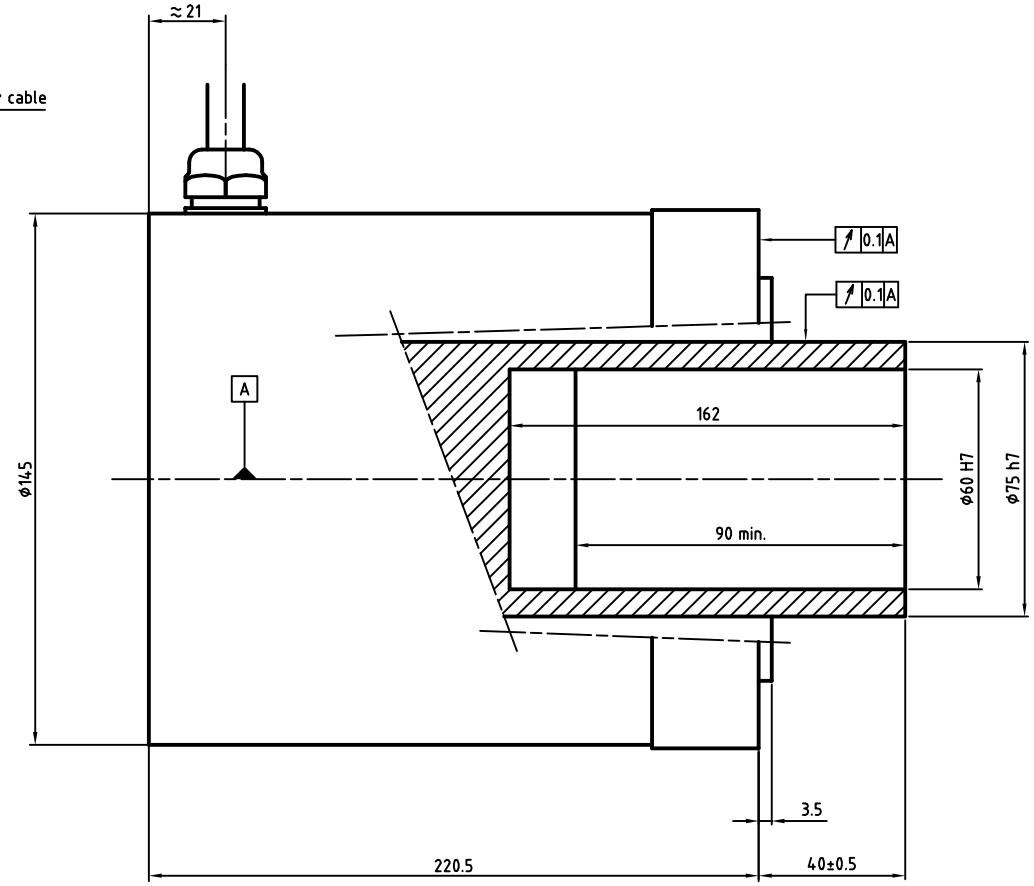

ENCODER SIGNAL COLORS				
Wires colors	ERN1387	ERN1381	ECN1313	EQN1325
White	A+	0V	Up	Up
Brown	A-	Up	0V	0V
Green	R+	A+	A+	A+
Yellow	R-	A-	A-	A-
Pink	D+	B-	B-	B-
Grey	D-	B+	B+	B+
Blue	C+	R+	DATA+	DATA+
Red	C-	R-	DATA-	DATA-
Black	Thermal	Thermal	CLOCK+	CLOCK+
Violet	Thermal	Thermal	CLOCK-	CLOCK-
Grey/Pink	B+	N/A	Thermal	Thermal
Red/Blue	B-	N/A	Thermal	Thermal
White/Green	0V	N/A	N/A	N/A
Brown/Green	Up	N/A	N/A	N/A

ALXION

AUTOMATIQUE & PRODUCTIQUE
Parc Technologique des Fossés Jean
92712 COLOMBES Cedex
Tél: 0141306304 - Fax: 0141306136

145ST3M16[4-5-8-9]XXXXX